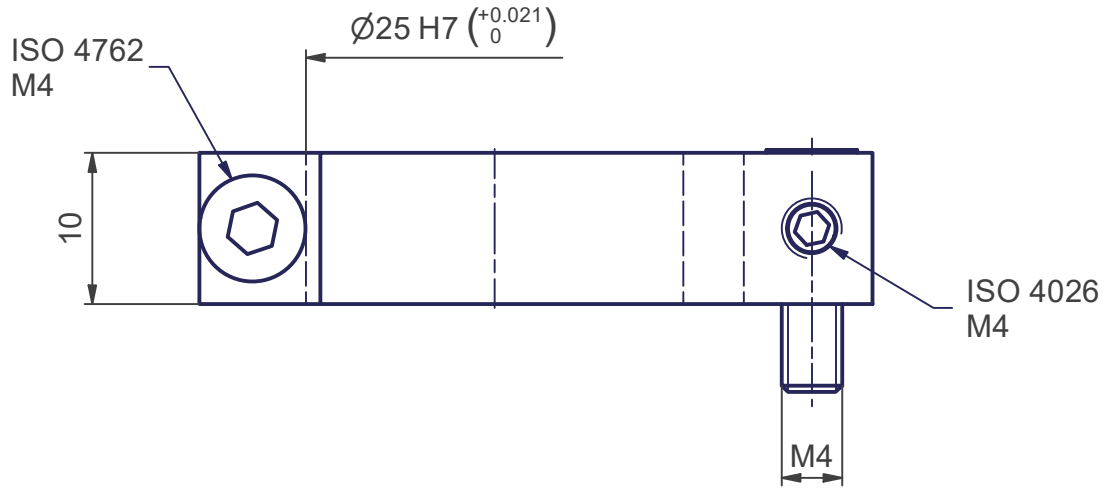

(2 : 1)

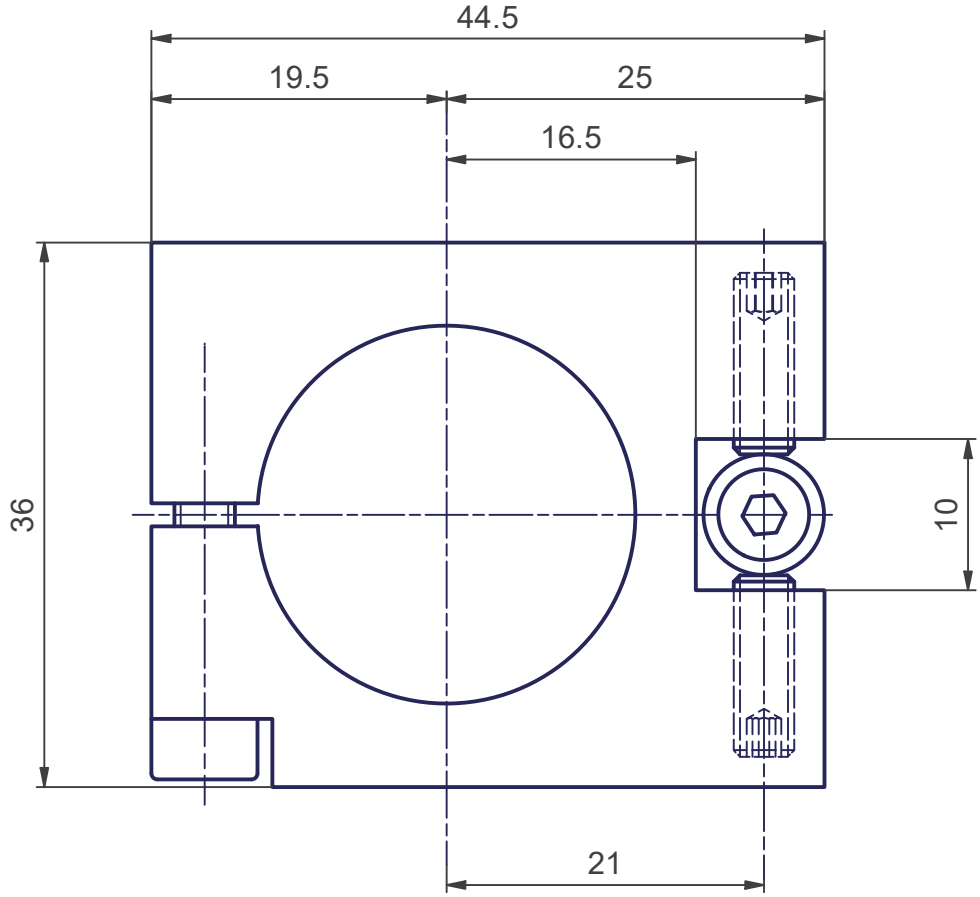

(1 : 1)

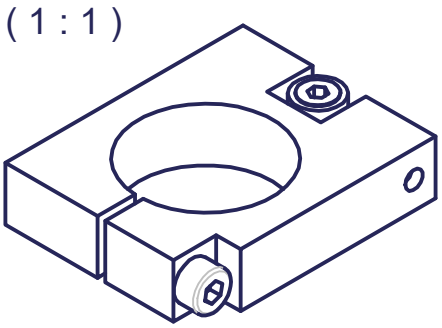

Marcel Aubert SA reserves the right to make changes without prior notice or obligation.	Unit [mm]	Name M.Saam	Date 15.07.2024
Description Positioning clamp for geared drive	Type MA 155-026		Category $20-0
marcel – aubert – sa	Item code BRI-007824		Page no. 1 / 1

S:\Bureau-Technique\Dispositifs\MA 155-026$20.idw